

Lucent – bain autoportant 59″



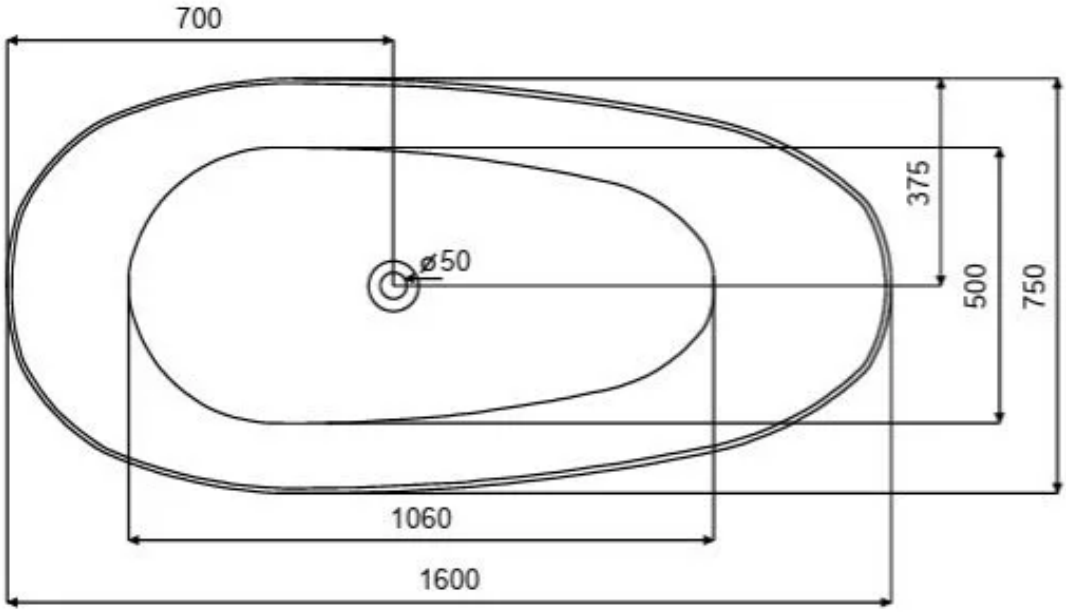

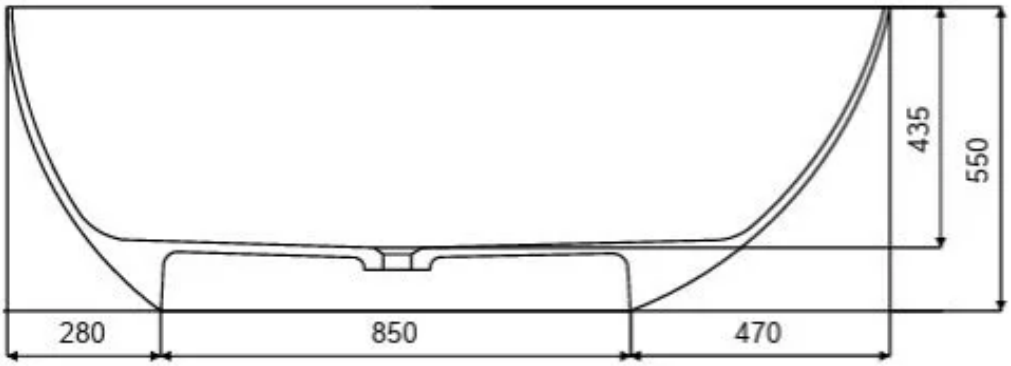

Pure Design