

Halo – bain autoportant 67″



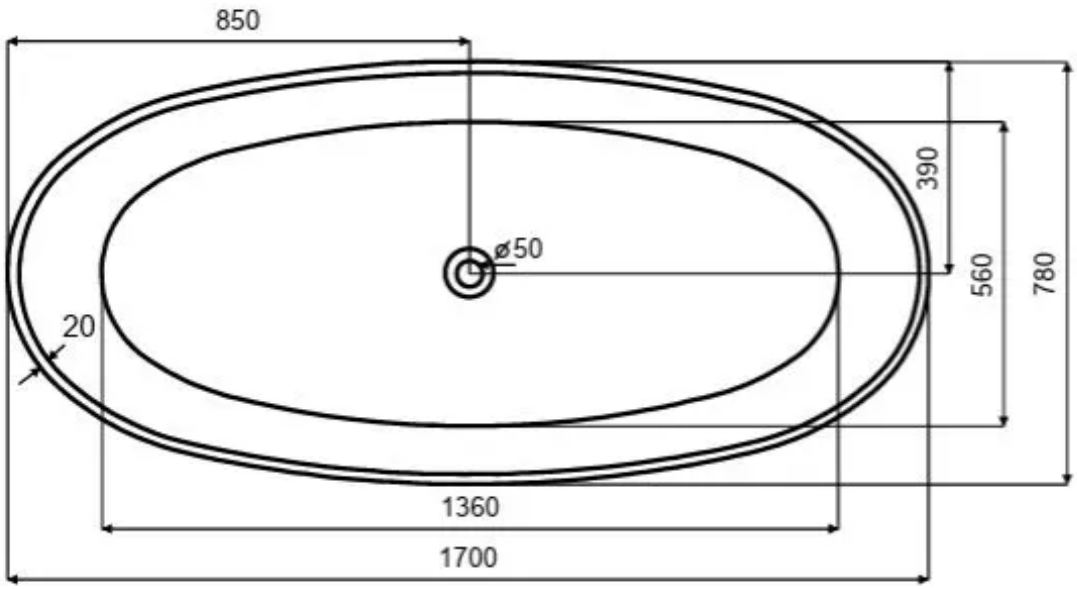

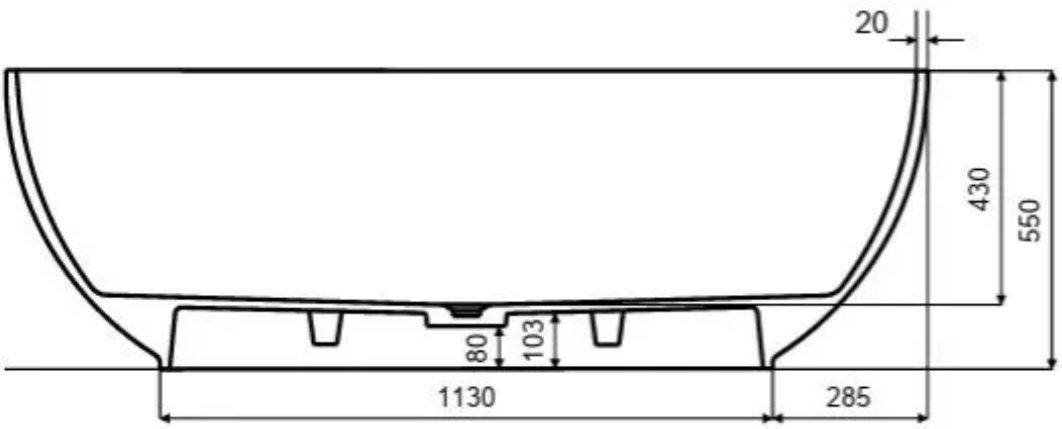

Pure Design