

Eaura – bain autoportant 71″

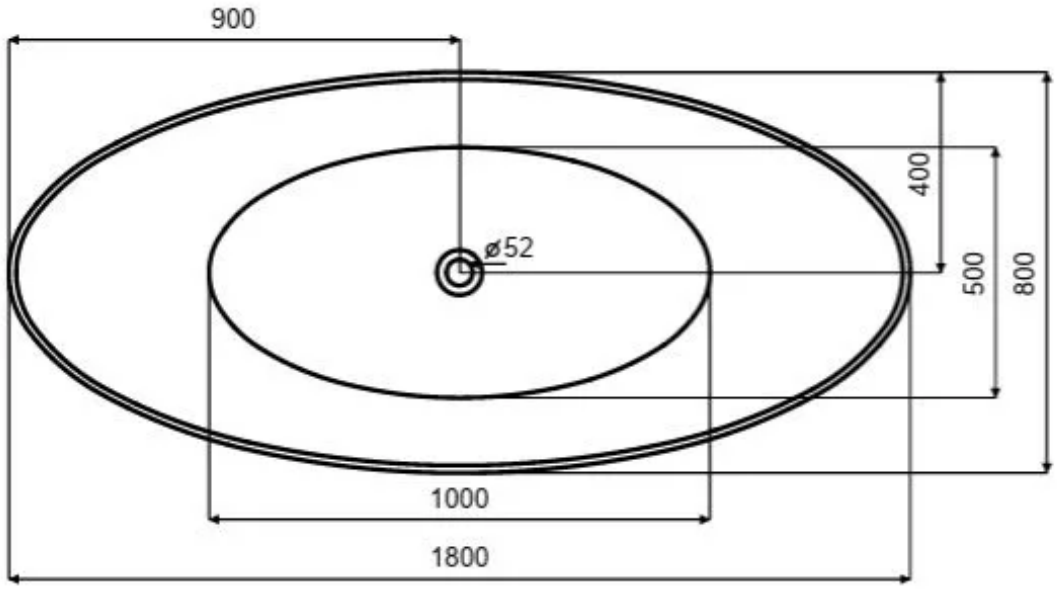

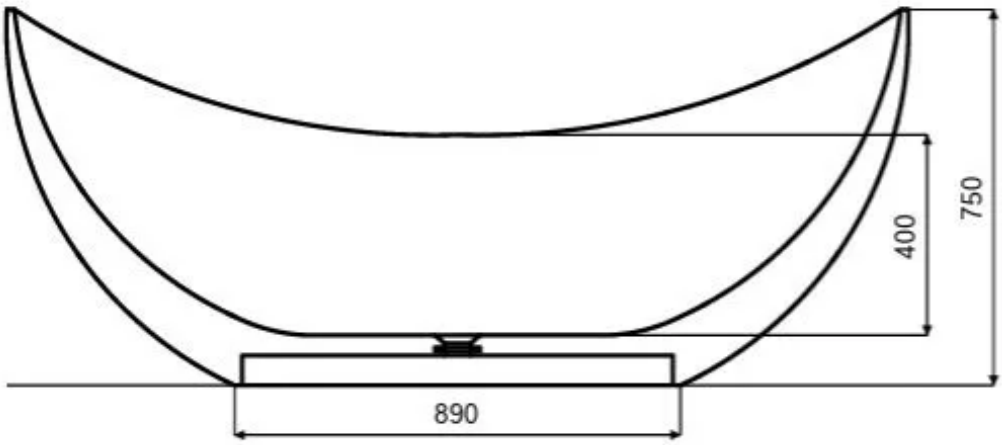

Pure Design