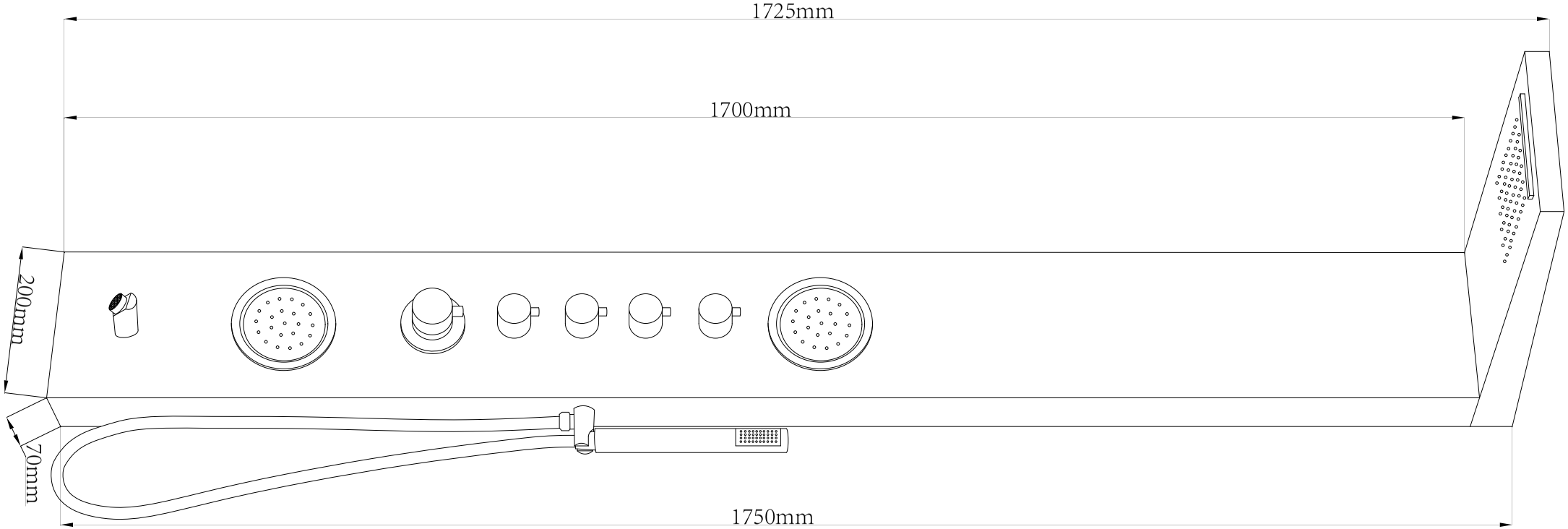
1725mm
1700mm
200mm
70mm
1750mm

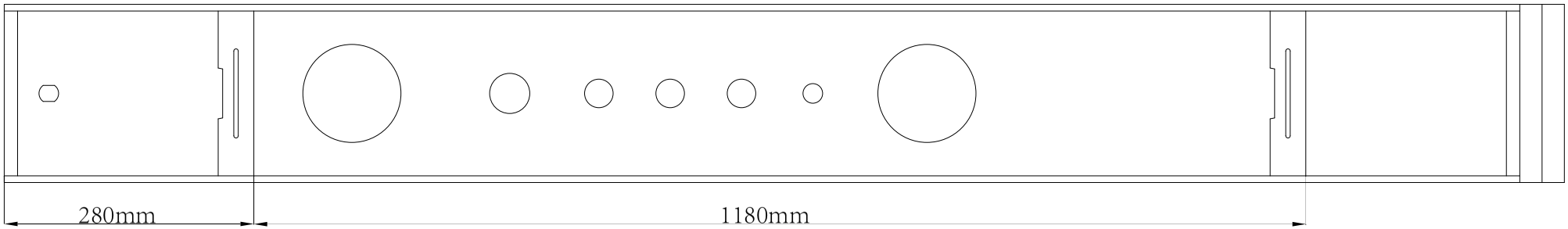
280mm
1180mm